protubo.biz
passt einfach perfekt

Datasheet

team@protubo.biz
T +49 (0) 4202 95 55 50

Description

Elbows, DIN2605/EN10253-2-A-3D-90°
P235GH, certificate 3.1

Main data

70.00 x 4.00 mm

D	70.00 mm
S	4.00 mm
r	92.00 mm

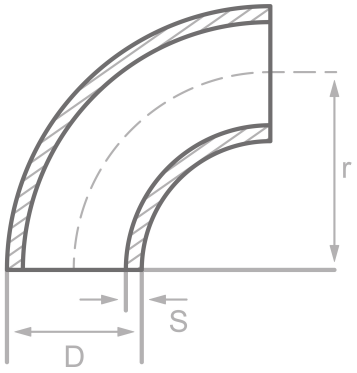



Chemical analysis (heat) in % of mass

(one content=max. value)

Short name: P235GH

Mat. grade: 1.0345

C	Si	Mn	P	S	Cr	Cu	Mo	Nb	Ni	Ti	V	Others
0.16	0.35	1.20	0.025	0.020	0.30	0.30	0.08	0.01	0.30	0.04	0.02	Al

Mechanical properties

Short name: P235GH
Mat. grade: 1.0345

Upper yield strength reH or Rp0.2 min for wallthicknesses T in mm, N/mm2 at room temperature		Tensile strength Rm for wallthickn. T in mm, N/mm2 at room temperature		Elongation A at room-temperature, min.%		Min. impact energy KV in J	
T<=16	16<T<=60	T<=16	16<T<=60	Longit.	Transv.	Longit.	Transv.
235	225	360-500	360-500	25	23	40	27

Sources: EN 10253, DIN 17175, DIN 2528, DIN 1629, Stahlschlüssel, ASTM

protubo.biz is a registered trademark of PM Fittings GmbH. Information without guarantee. Errors and omissions excepted